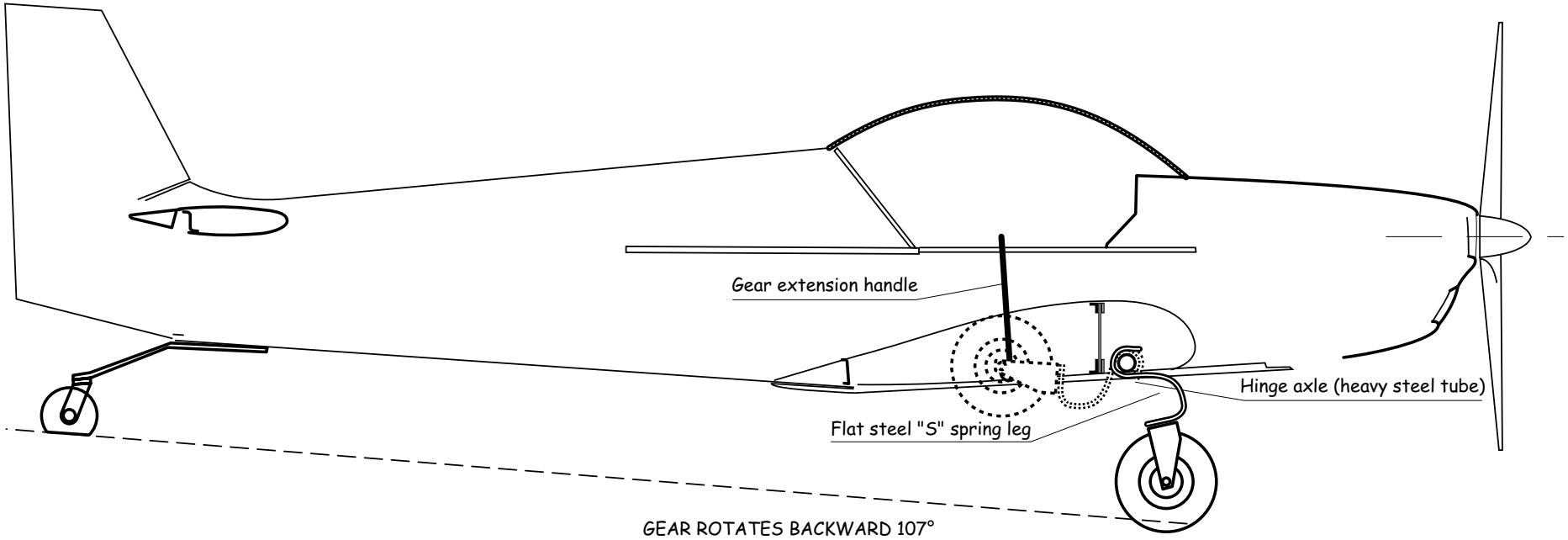


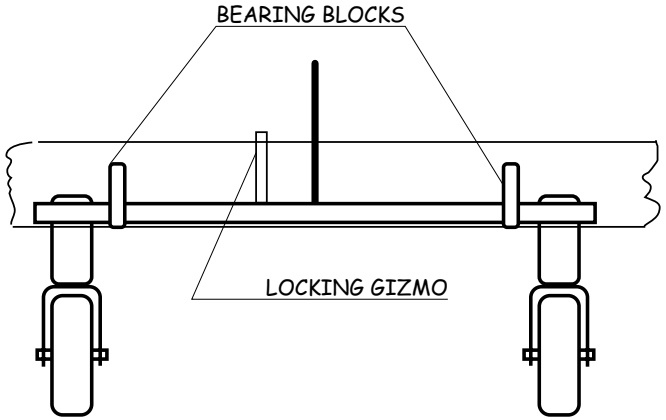


| CH 601 ZODIAC | RETRACT IDEA |
|---|---|

2003 Michael D. Mossman